ACCENT 02

Graphics:
Total Graphic Area: 22"w X 18.5"h
Total Finished Area: 21"w X 17.5"h
Total Visual Area: 21"w X 17"h

Use separate template for graphic.
This template only represents the graphic panels on the top and bottom of the shelf.

Please be sure to include the 1/2" bleed around the perimeter to compensate for the finishing of the rigid sintra graphics.
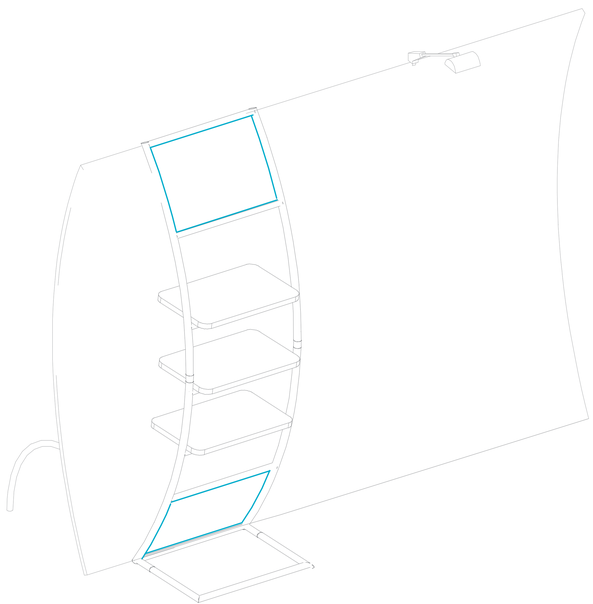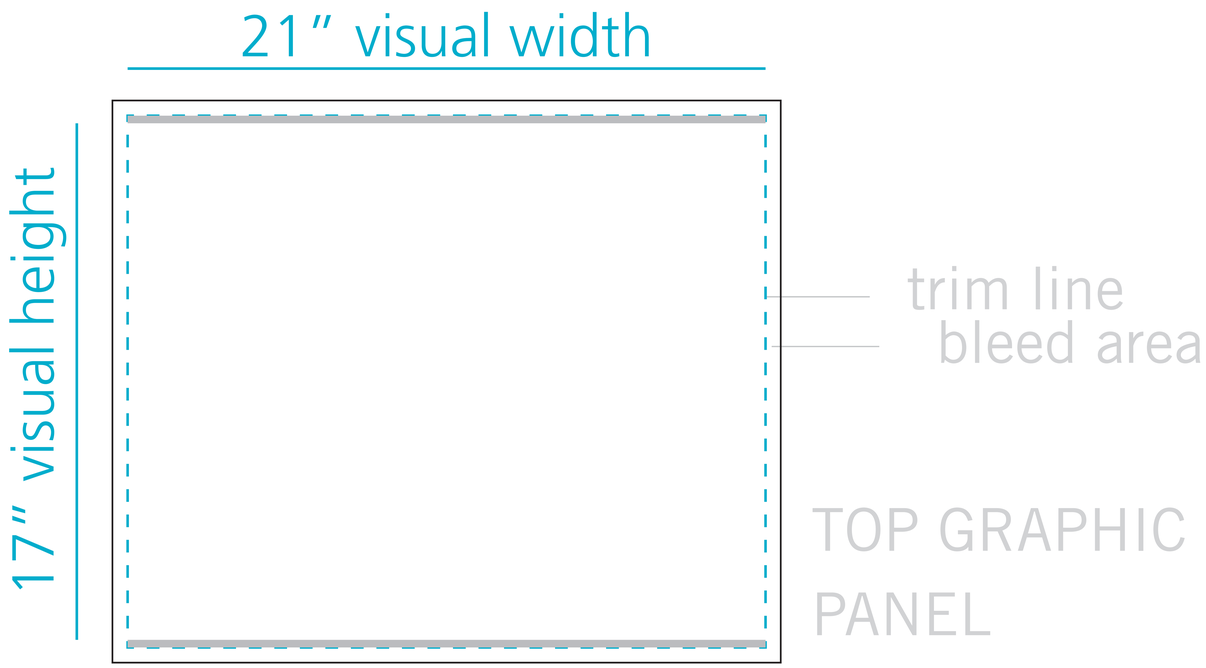
General Artwork Guidelines
- cmyk color mode
- do not embed images, supply them
- resolution must be 100-120 ppi
- all fonts must be created to outlines